all about Baby®

Lovable dolls for everyday play!

⚠ **CAUTION:**
Adult Assembly Required. Contains screws which are small parts. Care should be taken when unpacking and assembling product.

#3640105

ASSEMBLY INSTRUCTIONS

Tools are not included
Contents may vary

Cozy Cradle

Rock baby to sleep in this sweet wooden cradle!

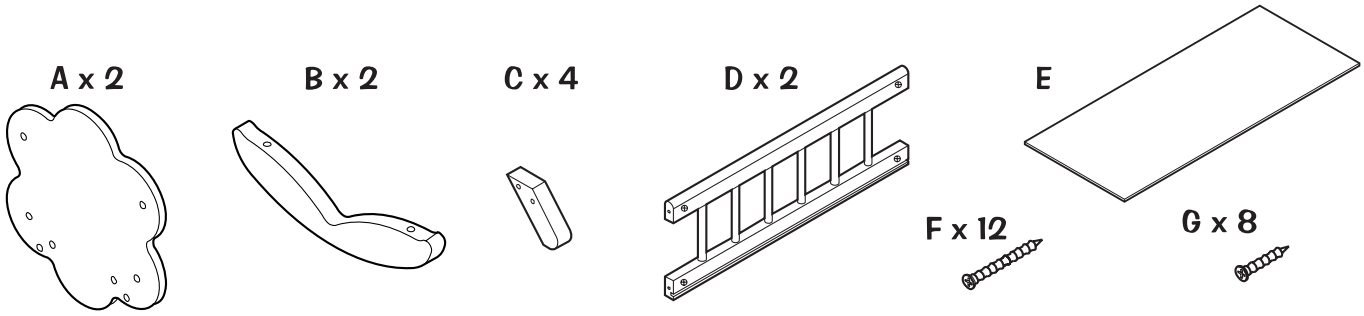

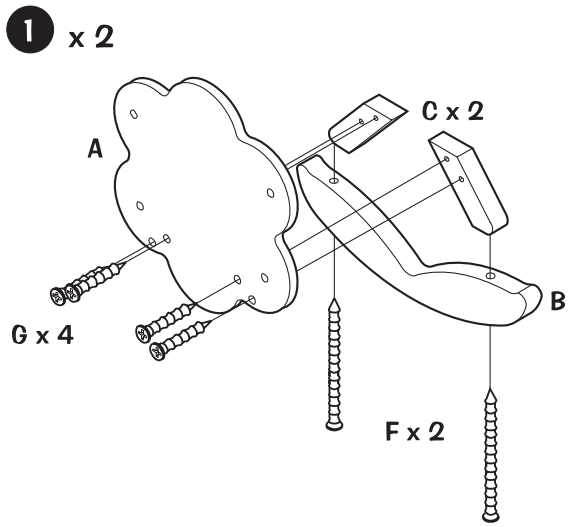

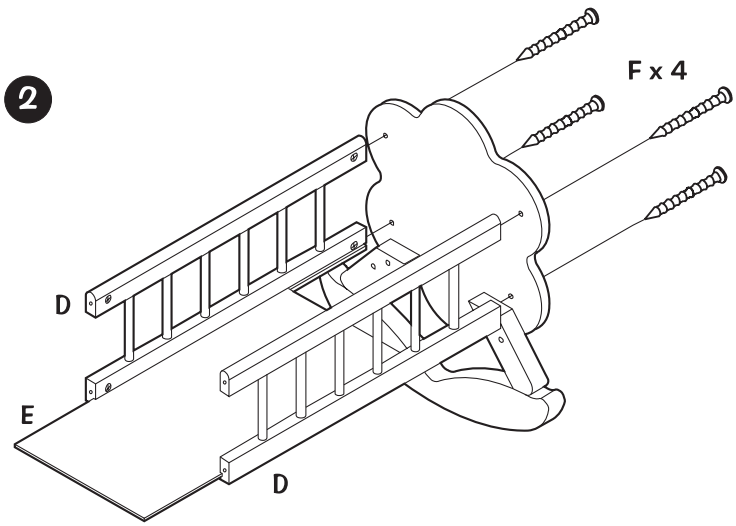

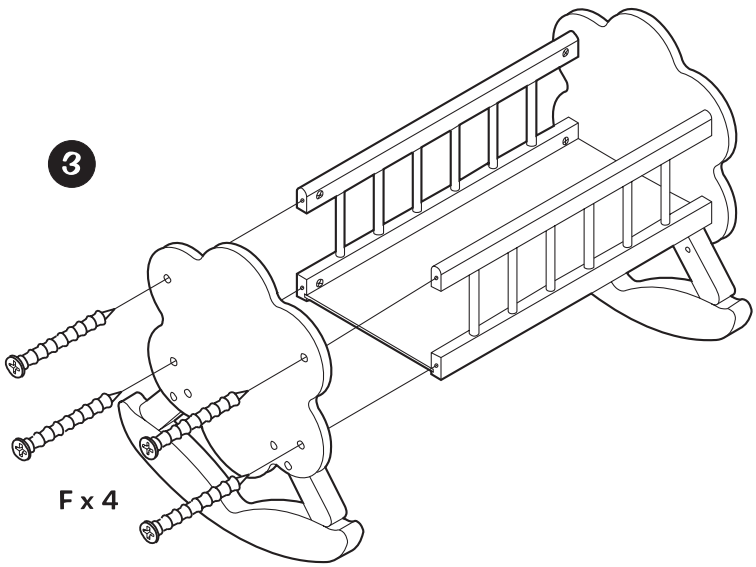

Made and printed in China.
©2005 Small World Toys®. P.O. Box 3620, Culver City, CA 90231
Conforms to ASTM F963-03
Small World Toys and **All About Baby** are registered trademarks of Small World Toys.

See you at www.smallworldtoys.com/allaboutbaby